Expansion kit for Shuttle slim PCs to install a LTE/4G card

The Shuttle XPC accessory WWN03 allows compabitle Shuttle XPC slim Barebones to be upgraded with an LTE/4G function for mobile network. The LTE card will occupy the 2.5" bay, so you have to use an M.2 SSD as mass storage device. The required LTE/4G card in M.2-3042 format and an activated Nano SIM card is not included in the scope of delivery.

Feature Highlights

Contents	• Daughterboard LN006 with 150 mm USB cable • Fastening screw for M.2/LTE card (two-parts: bolt with screw) • 3x screw to install LN006 in a 2.5" bay • 2x LTE/4G antennas • 2x antenna cables with toothed lock washer and screw nut • Quick installation guide
Adapter card	• USB connector to connect to the mainboard • M.2 socket supports one LTE/4G module M.2-3042 Key B • Supports one SIM card in Nano format
Two external antennas	LTE/4G dipole omnidirectional antenna Multi-band: supports EU frequency bands (800, 1800, 2600 MHz) for GSM/UMTS/LTE and the following frequency ranges: 704~960, 1428~1575, 1720~2170, 2400~2690 MHz Colour: black, Length overall: 135.7 mm Dimensions of the antenna body: 114.8 x 20.1 mm Impedance: 50 Ohm Voltage Standing Wave Ratio (VSWR): <= 3.0 Radiation: Omni, Gain: 2 dBi, Polarisation: vertical Connector: SMA
Two antenna cables	RF cable lengths: 20 cm Connectors: 1) SMA Pigtail female 2) I-PEX MHF 4
Compatibility	The WWN03 can be used for 1) Shuttle XPC slim DS10Ux/DS20Ux series - the existing WLAN function can still be used then. 2) Shuttle XPC slim DH32U, DH410, DH410S, DH470, DH610, DH610S, DH670, XH510G2, XH610, XH610V, DL20N, DL20N6 - the WLAN accessory WLN-M can not be installed at the same time. Additional components are required for operation: - LTE/4G module M.2-3042 Key B - SIM card in Nano format Successfully tested LTE/4G modules: - Sierra EM7455 (CAT 6, for EMEA,North America) - Sierra EM7430 (CAT 6, for APAC) - Huawei ME906S (CAT 4, for EMEA, Australia, NZL) - Quectel EM06-E (CAT 6, for EMEA, Australia, Brazil) WWN03 is not compatible to LTE cards with PCIe interface e.g. Fibocom L850-GL-00 LTE module

Shuttle XPC accessory
WWN03
Expansion kit for LTE/4G module and Nano SIM card

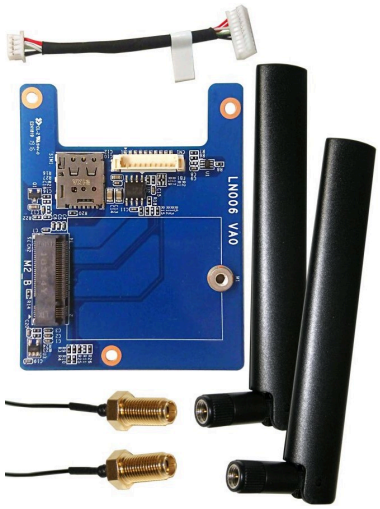

Shuttle XPC accessory WWN03

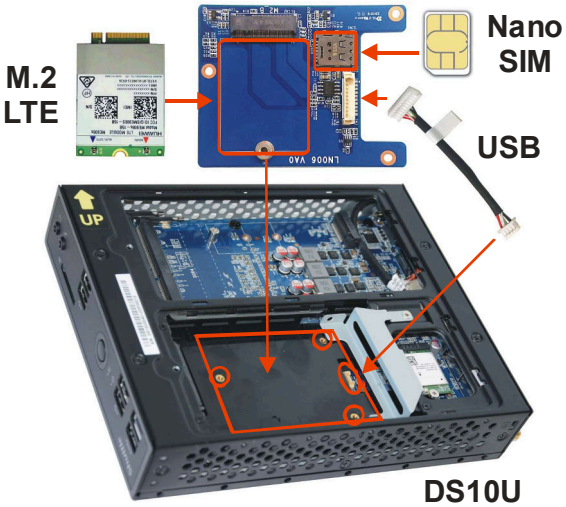

The 2.5" bay will be occupied by the WWN03 kit and you have to use a M.2 SSD card.
The LTE module and SIM card is not included.

Images for illustration purposes only.

8 87993 80031 8

© 2022 by Shuttle Computer Handels GmbH (Germany). All information subject to change without notice. Pictures for illustration purposes only.

Shuttle Computer Handels GmbH
Fritz-Strassmann-Str. 5
25337 Elmshorn | Germany

Tel. +49 (0) 4121-47 68 60
Fax +49 (0) 4121-47 69 00
sales@shuttle.eu

Can WLAN and LTE/4G be used simultaneously?

DS10U/DS20U Series



The DS10U/DS20U standard product comes with two external WLAN antennas mounted on the back. Two additional antennas can be mounted on the side if the device stands in horizontal position (no rubber feet!) or is VESA mounted.

If the DS10Ux is operated in vertical position with the stand, you cannot install an antenna at the bottom side. This means only 3 antennas can be used for WLAN and LTE in total (either LTE or WLAN will have to work with one antenna only).

DH4xx/DH6xx Series



With the DH4xx/DH6xx series, a maximum of two external antennas can be installed on the back panel. The optional extensions for WLAN (accessory WLN-M) and LTE/4G (accessory WWN03) are each equipped with two antennas and should therefore not be installed at the same time if you want to use the full performance.

The WLAN and LTE/4G accessories can also be installed and used at the same time with only one antenna each, if you accept the lower radio performance.

Compatible SIM cards

The SIM card is used to identify your mobile phone in a mobile network. SIM cards have been shrinked over the years: The Mini standard has been superseded by Micro and Nano. The Shuttle XPC accessory WWN03 only supports Nano format. A new SIM card usually comes perforated in three sizes (Mini, Micro and Nano) and simply requires the desired format to be pressed out.

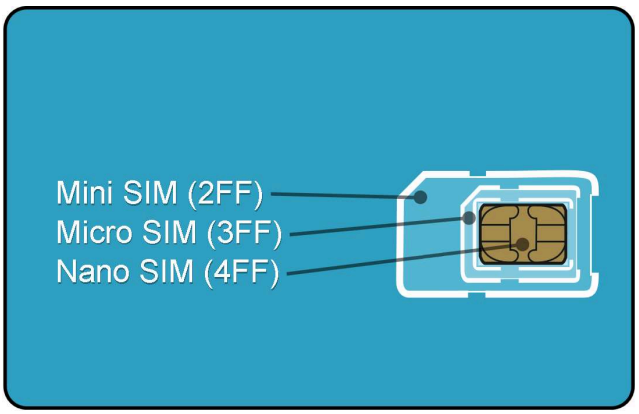

SIM format	Image	Supported by WWN03?
Mini SIM 25 x 15 mm	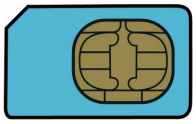	No
Micro SIM 15 x 12 mm		No
Nano SIM 12.3 x 8.8 mm	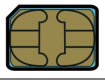	Yes

© 2022 by Shuttle Computer Handels GmbH (Germany). All information subject to change without notice. Pictures for illustration purposes only.

Shuttle Computer Handels GmbH
Fritz-Strassmann-Str. 5
25337 Elmshorn | Germany
Tel. +49 (0) 4121-47 68 60
Fax +49 (0) 4121-47 69 00
sales@shuttle.eu

Quick Guide to install the Accessory WWN03 into the XPC DS10U

Due to safety reasons, please turn off your computer completely first and unplug it from the power supply.

(1) Unscrew the two screws of the chassis cover. Slide the cover backwards and upwards.

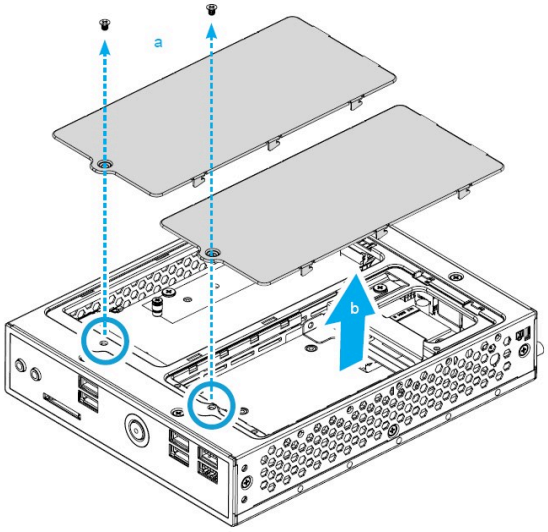

(2) Unfasten the rack mount screw and remove the rack, then unscrew the ten screws of the middle frame and remove it.

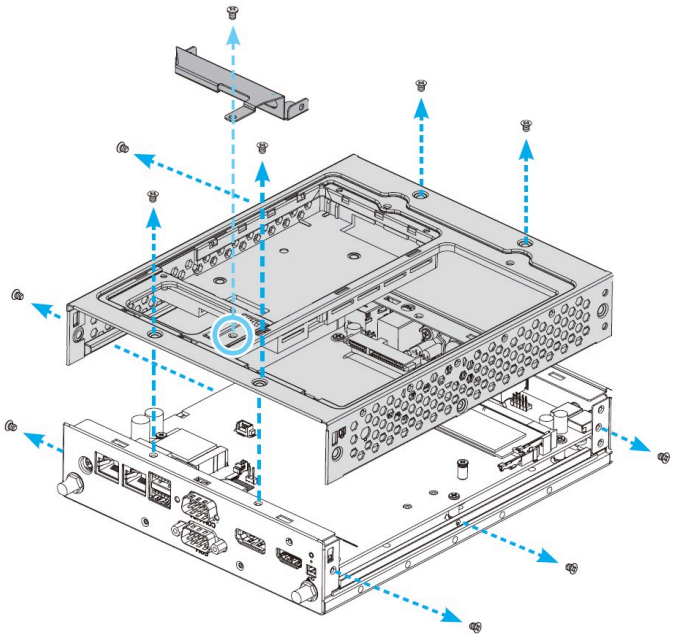

(3) Use a 6mm screwdriver to puncture the perforated hole in the middle frame from the outside in. Once the screwdriver passes through the perforation, carefully remove the metal tag.

Caution: If the metal tag still does not detach, carefully bend it by pushing down from the inside of the middle frame.

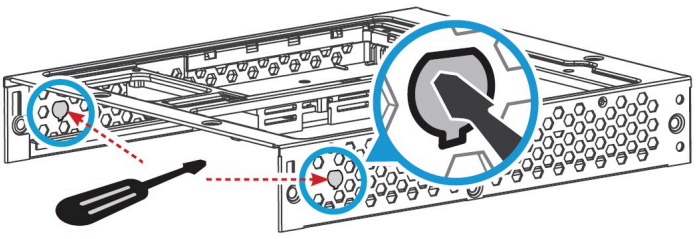

© 2022 by Shuttle Computer Handels GmbH (Germany). All information subject to change without notice. Pictures for illustration purposes only.

www.shuttle.eu

Shuttle Computer Handels GmbH
Fritz-Strassmann-Str. 5
25337 Elmshorn | Germany

Tel. +49 (0) 4121-47 68 60
Fax +49 (0) 4121-47 69 00
sales@shuttle.eu

(4) Take out the two antenna cable connectors and remove the locks and protective sleeves.



(5) Then install the antenna cable connectors through the appropriate opening in the middle frame and use the lock to affix the antenna from the outside.

Caution: When leading the cable connector through the opening, check the socket alignment and only push horizontally. DO NOT turn or twist the cable. Should any difficulties occur, make sure the surface is clean. Finally, check the alignment again and carefully apply more force.

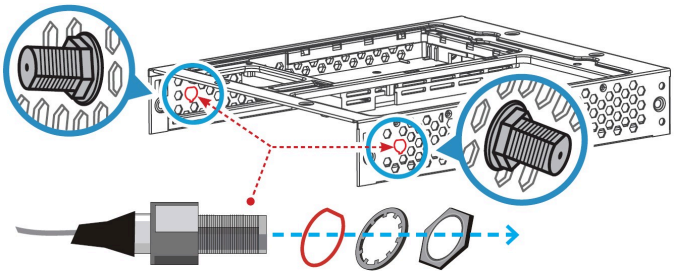

(6) Replace the middle frame, then fasten the ten screws. As shown, place the daughterboard (LN006) in the chassis and fasten the three screws.

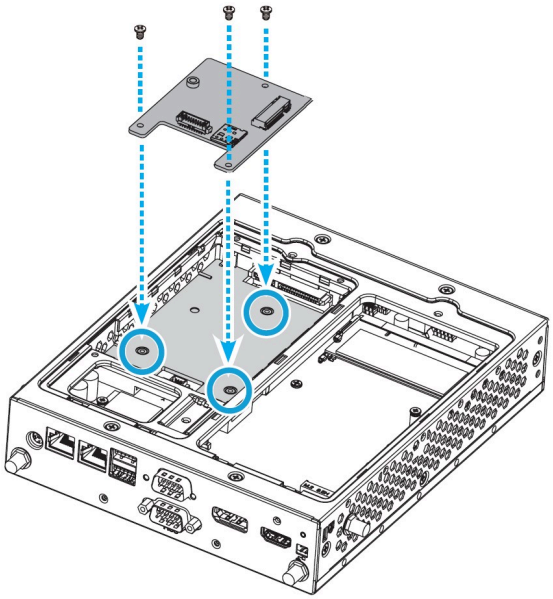

(7) Then connect the USB cable.

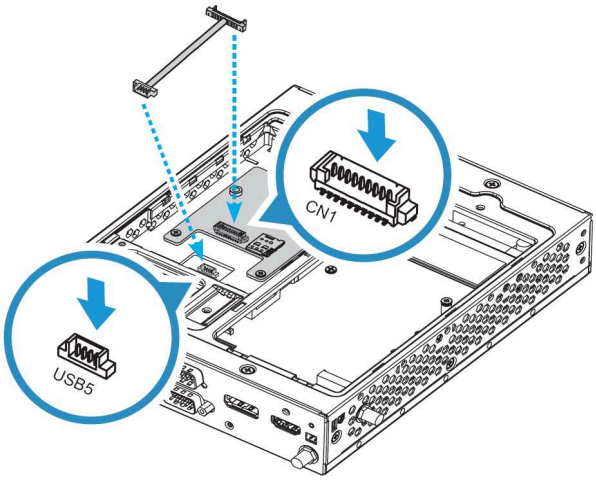

© 2022 by Shuttle Computer Handels GmbH (Germany). All information subject to change without notice. Pictures for illustration purposes only.

Shuttle Computer Handels GmbH
Fritz-Strassmann-Str. 5
25337 Elmshorn | Germany
Tel. +49 (0) 4121-47 68 60
Fax +49 (0) 4121-47 69 00
sales@shuttle.eu

(8) Please install an LTE module (M.2-3042 Key B card) in the relevant slot on the daughterboard, then tighten the screw with bolt firmly.

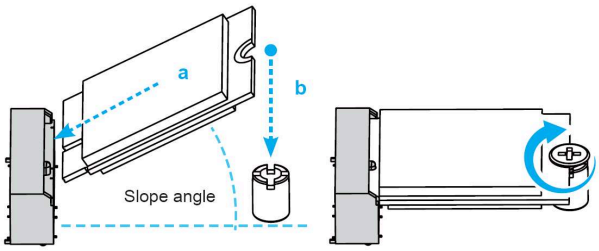

(9) As shown, connect the two antenna cables to "MAIN" and "AUX" on your LTE module.

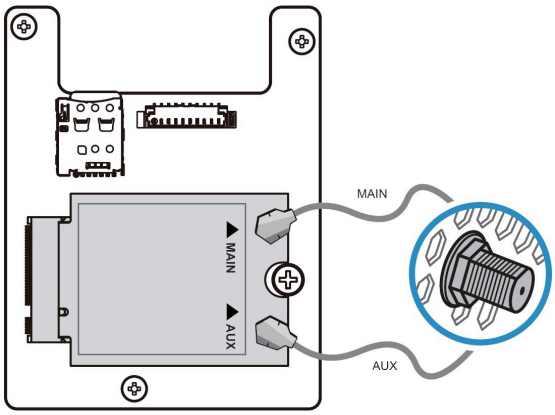

(10) Note: If the DS10U is operated in vertical position with the stand, you cannot install an antenna at the bottom side. This means only 3 antennas can be used for WLAN and LTE in total (either LTE or WLAN will have to work with one antenna only).



(11) Replace the case cover and fasten its screws.

Screw the antennas into position as pictured. Make sure they are aligned vertically to achieve the best possible signal reception.

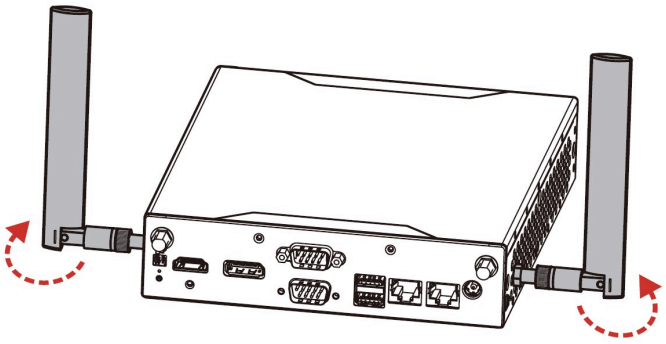

© 2022 by Shuttle Computer Handels GmbH (Germany). All information subject to change without notice. Pictures for illustration purposes only.

Shuttle Computer Handels GmbH
Fritz-Strassmann-Str. 5
25337 Elmshorn | Germany
Tel. +49 (0) 4121-47 68 60
Fax +49 (0) 4121-47 69 00
sales@shuttle.eu

Quick Guide to install the Accessory WWN03 into the XPC DH4xx Series

Due to safety reasons, please turn off your computer completely first and unplug it from the power supply.

(1) Unscrew the two screws of the chassis cover. Slide the cover backwards and upwards.



(2) Unfasten the screws of the cooling system (left) and the drive rack (right). Please also refer the Quick Guide of the Shuttle DH4xx.



(3) Locate the two holes for the LTE antennas. Use a screwdriver to puncture the perforated holes from the outside in (see left). Once the screwdriver passes through the perforation, carefully remove the metal tag. Then install the antenna cable connectors through the appropriate openings and use the locks to affix the antennas from the outside.



© 2022 by Shuttle Computer Handels GmbH (Germany). All information subject to change without notice. Pictures for illustration purposes only.

Shuttle Computer Handels GmbH
Fritz-Strassmann-Str. 5
25337 Elmshorn | Germany

Tel. +49 (0) 4121-47 68 60
Fax +49 (0) 4121-47 69 00
sales@shuttle.eu

(4) As shown, place the daughterboard (LN006) on the drive rack and fasten with three screws.

Then connect the daughterboard with the 150 mm USB cable to the onboard USB connector "CN12" of the mainboard.

Please install an LTE module (M.2-3042 Key B card) in the relevant M.2 slot on the daughterboard, then tighten the screw with bolt firmly. Please insert your Nano SIM card into the relevant slot. LTE module and SIM card must be pruchased separately.

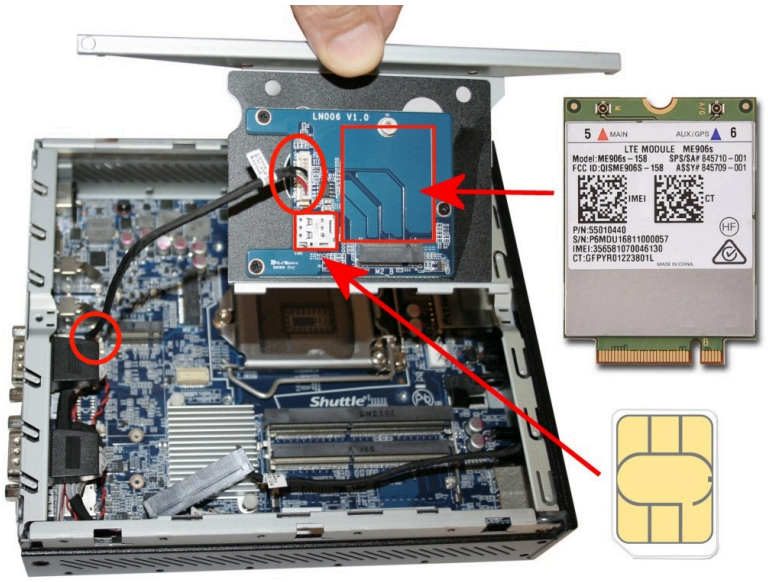

(5) As shown, connect the two antenna cables to "MAIN" and "AUX" on your LTE module.



(6) Replace cooling system, drive rack and case cover and fasten its screws. Screw the antennas into position as pictured. Make sure they are aligned vertically to achieve the best possible signal reception.



© 2022 by Shuttle Computer Handels GmbH (Germany). All information subject to change without notice. Pictures for illustration purposes only.

Shuttle Computer Handels GmbH
Fritz-Strassmann-Str. 5
25337 Elmshorn | Germany
Tel. +49 (0) 4121-47 68 60
Fax +49 (0) 4121-47 69 00
sales@shuttle.eu